The Journal of **Ancient Egyptian Architecture**

vol. 4, 2020

Moving heaven and earth for Khufu: Were the Trial Passages at Giza components of a rudimentary stellar observatory?

David Ian Lightbody

Cite this article:

D. I. Lightbody, 'Moving heaven and earth for Khufu: Were the Trial Passages at Giza components of a rudimentary stellar observatory?', *JAEA* 4, 2020, pp. 29-53.

JAEA www.egyptian-architecture.com

ISSN 2472-999X

JAEA 4, 2020, pp. 29-53. www.egyptian-architecture.com

Moving heaven and earth for Khufu: Were the Trial Passages at Giza components of a rudimentary stellar observatory?

David Ian Lightbody[1]

Abstract:

This article describes a digital archaeological experiment to test a new hypothesis that explains the purpose and unusual form of the so-called Trial Passages at Giza. The enigmatic connected passages are carved into the bedrock on the east side of the Great Pyramid of Khufu and have been interpreted in various ways over the decades since they were first cleared. Based on a new analysis of their design, it is proposed here that they could serve very well as a place from which to observe the northern stars. Prolonged and accurate measurement of the stars of the circumpolar region of the northern sky could have been made from inside the main inclined passage, which rises from south to north. Accurate location of the Northern Celestial Pole (NCP) during these observations could have facilitated the accurate cardinal alignment of sides of the Great Pyramid. Other details of the architecture support this interpretation, and are set out here for consideration.

Background history of the Trial Passages

Visitors to the Giza Plateau today may notice three rectangular openings in the bedrock 87.5 m east[2] of the Great Pyramid of Khufu (Appendix 1). They are now closed off with metal gates and surrounded by railings, but when accessed they lead into an enigmatic set of sloping passages with rectangular sections often referred to as the Trial Passages. To date there remains a lack of consensus and clarity over their original purpose. All of the archaeologists who have surveyed them over the years concluded that they were built around the time the Great Pyramid was built, and several have noted the similarity in form between these passages and the descending and ascending passages of the Great Pyramid itself.[3] The inclinations of both sets of passages are all similar[4] and they are of similar width (2 cubits or 1.05 m), and all of them are aligned on a north-south axis. Several different hypotheses have been put forwards over the years since the Trial Passages were first cleared in an attempt to explain them, and they have been accurately measured and described.

1 Many thanks to reviewers Chris O'Kane, Alexander Puchkov, and Franck Monnier, whose feedback has improved this article significantly. Thanks also to Jon Bodsworth for providing photographs. This paper is dedicated to the late Glen Dash who sadly passed away while it was being completed. He was able to read the first draft and his feedback was extremely valuable. His own hypothesis, Dash (2017), on this subject matter was published in volume two of the JAEA: www.egyptian-architecture.com/JAEA2/JAEA2_Dash.

2 Petrie (1990), appendix 107.

3 Maragioglio and Rinaldi (1965), Tav 9; Maragioglio and Rinaldi (1965), pp. 189-90; Petrie (1883), pp. 50-51 and Pl. IIIb; Lehner (1985), pp. 45-50; Greenlees (1925); Vyse (1840), Vol. 1, pp. 189-90; Vol. 2 Appendix, p. 30.

4 26.5°, 50%, 1:2, or a seked-like slope of 14 palms using the ancient Egyptian system.

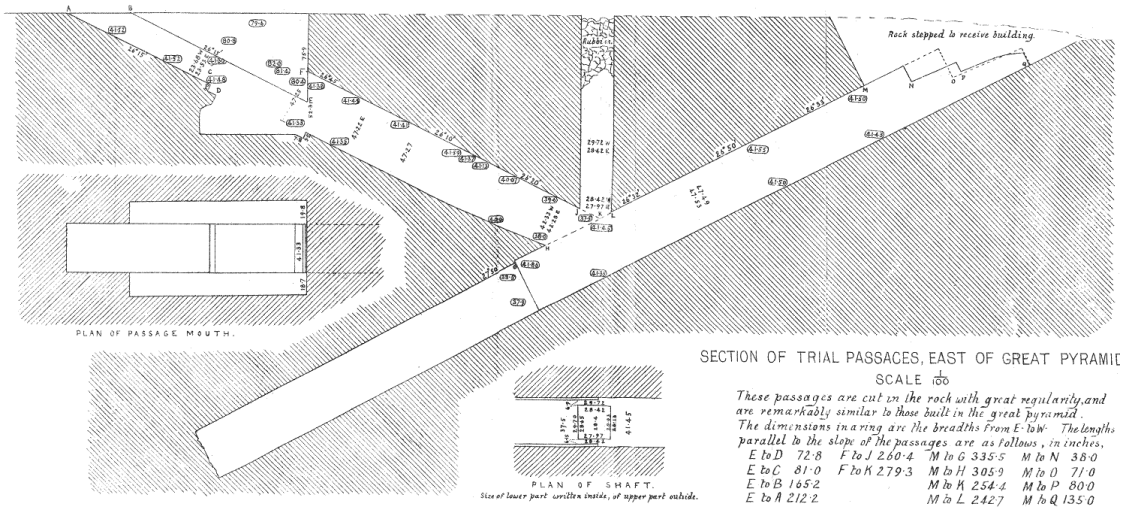

Fig. 1. Petrie's diagram presenting the data from his 1882/3 survey of the Trial Passages at Giza (north is to the right) (Petrie (1883), plate 3b).

The set of connected tunnels incorporates three separate openings onto the surface. The tunnels were excavated from the bedrock, which consists of nummulitic limestone at that location. The system is located to the north side of the causeway running between Khufu's mortuary temple and the valley temple that was originally built down below on the Nile floodplain, and which is now lost. Together, the shafts stretch approximately 23 m in length horizontally in a north south orientation, and reach down to a depth of approximately 10 m. The explorer Howard Vyse and later the Egyptologist Flinders Petrie surveyed and drew plans of these passages in the 19th century (Figure 1) revealing a layout that Petrie believed to be some sort of replica or trial version of the internal passages within the Great Pyramid. Parts of the configuration of the Trial Passages do resemble the Great Pyramid's descending passage where it meets the ascending passage. This junction with the upper shafts in the Great Pyramid still contains Aswan granite plugging blocks and so it was suggested that the Trial Passages were designed to test that block closing system. A narrowing of the ascending passage at that location corresponds with a narrowing of the southern Trial Passage at the equivalent location, and it has been proposed that this detail was deliberately designed to block the plugging stones at those positions. It is clear, however, that there are no such granite blocks installed in the Trial Passages.[5]

The most obvious difference is the tall vertical shaft in the Trial Passages, square in section, that rises above the junction between the two inclined passages. It has no equivalent in Khufu's pyramid. French scholar Franck Monnier considers it possible that the Trial Passages were a prototype to test the closing system in the ascending passage. This used a line of blocks intended to plug the access route into the monument at the junction of the two main passages, and in his hypothesis the vertical shaft in the Trial Passages may then have provided access to allow observation of the point where the first test closing blocks would become stuck in the narrowing corridors. Again, it must be noted that there are no plugging blocks in situ in the Trial Passages and no fragments have been found.

5 Other details of the design of the Trial Passages such as the sides of the southern access passage also resemble the bottom of the Grand Gallery with its side benches. There is no parallel in the Trial Passages for the 'service shaft' found opening onto the side of the Grand Gallery, however, and the section that supposedly equates to the horizontal corridor leading to the Queen's Chamber, in the southern Trial Passage, is only very short.

Other scholars have suggested that the Trial Passages were intended to be shafts leading into a smaller pyramid, perhaps a scaled down version of the Great Pyramid that was to be built at that location, or which was built there and was then cleared off the surface at a later date. No traces of foundations for a superstructure have ever been found, and no burial chamber has been excavated in the area. The sections and inclinations are, nevertheless, similar to those of the Great Pyramid.

The possibility remains that the passages had a different purpose, or perhaps another purpose. Giza surveyors Glen Dash and Flinders Petrie already noted that the inclinations of the north facing passages in the Great Pyramid could have been associated with efforts to observe the northern stars. Dash has suggested an observation device that could have been incorporated into those shafts to aid orientation of the architecture.

In the new hypothesis set out here, it is suggested that the Trial Passages were in fact designed to carry out accurate observations of the circumpolar stars in advance of the construction of the Great Pyramid, and that observation devices of the type described by Dash were installed within them. The Trial Passages were designed and intended to be used to establish an accurate, astronomy-based, north-south alignment for the construction of the Great Pyramid of pharaoh Khufu.

Introduction to the new hypothesis

Many scholars have addressed the mechanisms and methods through which the ancient Egyptians were able to orient the sides of the Great Pyramid[6] to the cardinal directions (N-S-E-W) with great accuracy.[7] Egyptologist I.E.S. Edwards noted that no equipment or records showing how it was done have ever been recovered,[8] but geometric surveys of the sides and edges of the monument show that they originally deviated by, on average, less than 1/15th of a single degree from the cardinal directions when the casing stones were in place.[9] Although very precise, the visual precision of this alignment is within human naked eye capabilities.[10] Several authors have proposed methods that could have been used to achieve this using the stars that revolve around the Northern Celestial Pole as targets,[11] while others have proposed methods based on shadows cast by the sun.[12] In this article, I postulate that the alignment procedures carried out at Giza made use of the Trial Passages to the east of the Great Pyramid to observe the stars around the NCP over a prolonged period of time. The observations were then used to establish an accurate north-south surveying reference line for the Giza plateau. If valid, this new hypothesis lends support to arguments contending that the stars were used in the architectural orientation procedures at Giza.

The reason the ancient Egyptian architects wanted to align the pharaonic tombs in this way was to raise the status of the pharaoh (who would be entombed there) above all his compatriots by

6 Belmonte (2001).
7 Dash (2015b).
8 Edwards (1979), pp. 117-118, 254-262.
9 Petrie (1883), p. 125; Lightbody and Monnier (2019), p. 82; Dash (2015b), p. 11; Cole (1925). Dash's 2015 survey showed that the average deviation of the casing was 3'54" +/-44" west of true north. This corresponds well with Petrie's 1882/3 findings of "about 4" arcminutes, also stated more precisely as 3'43" +/-6" west of true north.
10 The ancient Egyptians did not have telescopic optical technology, nevertheless, a 20-20 vision human being observing with the naked eye can differentiate details separated by, at best, approximately 1 arcminute. By way of comparison, the diameter of the full moon covers approximately 31 arcminutes of the sky, while the solar disk is very slightly larger, varying from 31 ½ to 32 ½ arcminutes in diameter. 1/15th of a degree is 4 arcminutes.
11 Petrie (1883); Edwards (1979). Petrie proposed a tall wall to the north supporting a long plumb line; Edwards envisaged a circular wall over which the circumpolar star would rise and set. The direction to true north would then bisect these points. No evidence of such structures has been recovered.
12 Dash (2015a).

associating him and his monument with the eternal heavens above, as closely as possible. This architectural propaganda was part of the typical legitimization program that surrounded the reign of any pharaoh. The political and theological aspects are discussed more fully elsewhere,[13] but the technical methods used to achieve the accurate alignments are addressed in the discussion below.

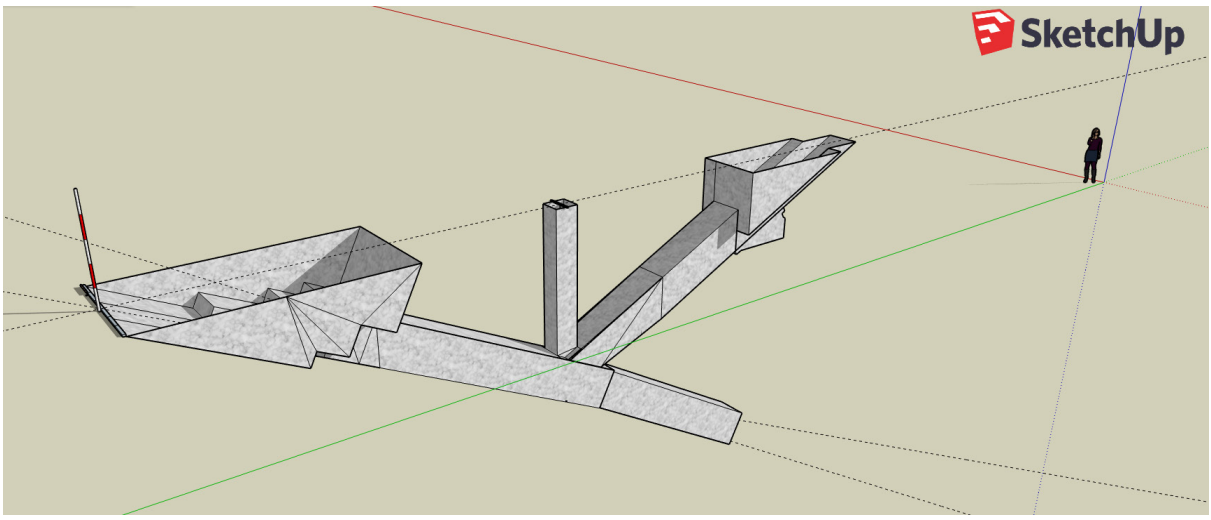

Fig. 2. General arrangement of the Trial Passages as a 3D model, looking south east. There are three entrances into the lower passages, via two sloped passages and one vertical shaft. The indicator pole on the left is hypothetical and would have been used as a vertical north alignment marker. It is shown as 5 cubits in height (2.62 m). The experiments showed that 3 cubits (1.57 m) would have been adequate (David Lightbody).

The cardinal alignment of ancient Egyptian monuments is closely related to a number of technical subject areas that have been studied extensively by Egyptologists over the years. Many published papers have been devoted to sky-based timekeeping methods, including those relating to sundials,[14] calendars,[15] and astronomy.[16] The extents and details of ancient Egyptian knowledge of the stellar constellations and their daily and annual movements have also been extensively discussed. With respect to the architecture on the ground, the issue of accurate alignment relates to surveying methods,[17] metrology, and the stretching of the cord ritual, which is attested during the Old Kingdom and even as far back as the Early Dynastic Period.[18]

More specifically, discussions of the astronomical methods employed at Giza have usually revolved[19] around the constellations close to the Northern Celestial Pole (NCP),[20] and how these were used

13 Baines and Yoffee (1998). This kind of technical knowledge could be described as high culture and was part of the legitimation program supporting the pharaonic hierarchy. Wilkinson (2001), p. 257.

14 Khurana and Symons (2016); Salmas (2013); Salmas (2014).

15 Robins (1995); Parker (1950).

16 Chatley (1940); Lull and Belmonte (2009); Neugebauer and Parker (1960).

17 Dash (2015b); Petrie (1883).

18 Greenwell (2005), pp. 15-16; Belmonte, Polo, and Miranda (2009); Arnold (1991).

19 Spence (2000), pp. 250-51; Edwards (1979); Lightbody and Monnier (2019), p. 156.

20 The north and south celestial poles (NCP and SCP) are the two imaginary points in the sky where the Earth's axis of rotation, indefinitely extended, intersects the apparently visible celestial sphere that forms the night sky. From Egypt, only the north celestial pole is visible. In the northern hemisphere, the NCP remain fixed in the sky as the Earth spins on its axis and all other stars appear to rotate around it, completing one circuit per day (strictly, per sidereal day). The celestial poles are also the poles of the celestial equatorial coordinate system, meaning they have declinations of +90 degrees and −90 degrees (for the north

to determine the NCP's location in the northern sky and by extension the direction of true north on the ground. The NCP is not marked by any particular visible astronomical object today, and was not so marked during the Old Kingdom. Today it is most closely orbited by the star Polaris (α Ursae Minoris), which currently rotates more than half a degree distant from the NCP on a daily basis.[21] The much slower wobble of the earth's axis, which describes a circle around part of the northern sky thanks to a phenomenon known as axial precession[22], means that the closest bright star circling the NCP at the time the Great Pyramid was built was Thuban (α Draconis).[23] At that time in approximately 2,590 B.C.[24] the orbit of Thuban was almost 1.5 degrees (81 arcminutes of the night sky) distant from the NCP. To achieve high precision alignments based on that object, it was, therefore, necessary to use some systematic observation and measurement procedure to determine the position of the NCP from the star's daily circling motion (or in conjunction with the motion of other circumpolar stars). Based on the architectural surveys, the ancient Egyptians were able to achieve that task with an accuracy of better than 1/15th of a single degree. Precisely how they managed to do that is still under discussion.[25]

All of these subjects are complex, challenging, currently lack clarity, and current theories provide few definitive answers. In response to that complexity, the content of this article remains doggedly focused on presenting a basic new hypothesis related to the architecture of the Trial Passages, with the intention only to demonstrate the practical feasibility of a procedure that could be carried out within them, and to establish and describe a possible sequence of tasks that would have constituted such a procedure.[26]

Introduction to the experimental method

3D modelling environment

In order to investigate the geometry of the Trial Passages structure in detail, a 3D model of them was built using the 3D CAD software Google/Trimble's Sketchup version 2019-06-21.[27] (Figure 2). This 3D modelling environment enables rapid prototyping and rendering of 3 dimensional designs,

and south celestial poles, respectively). Monnier (2017), pp. 198-200.

21 Approximately 39 arcminutes distant.

22 The period of the wobble is approximately 26,000 years.

23 The closest of the stars of less than 4 magnitude, which are relatively easy to observe. The star iota Draconis (magnitude 4.55) was at that time closer to the Northern Celestial Pole, but would have been very dim.

24 Bronk Ramsey *et al*. (2010), p. 1556.

25 Dorner (1981), pp. 167-168; Arnold (2003).

26 Haack (1984). Haack was the first to note that a linear regression line could be traced through some of the plotted points showing the cardinal alignment errors of Old Kingdom pyramids vs time. The slope of the resulting line represents a drift of around 20 arcseconds per year and Haack suggested this was the result of precessional drift on key star rising points on the horizon. This relationship does, however, require that the orientations of certain pyramids, including Djoser's, Khafre's, and Sahure's, are treated as outliers or are inverted (clockwise to counter-clockwise or vice-versa) to fit the line. While such a linear relationship may exist, the dataset supporting it is not particularly robust. Spence later suggested that the drift was due to precessional movement of stars around the NCP. As the direction of precessional drift for any particular star around the NCP depends on the observation date and time of day, Spence suggested that it was the vertical alignments of particular pairs of stars as they rotated around the NCP, at particular times, that were chosen and used to establish the azimuth of the NCP. Those vertical alignments then drifted over time due to precession. Dash later suggested that the errors were not due to precession at all, but were the by-product of an equinoctial solar alignment method, where the sun moved from east to west, but also drifted very slightly north or south through the day due to the change in seasons taking place, even within the time-frame of a single day. Again, the dataset supporting that hypothesis has some outliers that must be excluded or flipped before the model will fit the solar shadow data. The trends and errors in the dataset can equally be explained by an increasing level of construction accuracy leading up to Khufu's reign, followed by a decreasing level of accuracy as the Old Kingdom began to decentralize and slowly headed toward eventual disintegration. This is the hypothesis adopted in the current article.

27 https://www.sketchup.com/

and allows perspective views of, and from, structures to be simulated. The dimensions used to build the model were based on a detailed survey of the passages carried out by Flinders Petrie in 1882-3.[28] The digital model was built below the horizontal plane of the virtual environment as the passage system is below the ground at Giza. The dimensions and drawing produced by Petrie proved to be adequate so that a complete model of the passages could be created. An additional piece of data extracted from Petrie's survey was the orientation of the main axis of the passages, which he found to be 14' 43" east of north, or 14.72 arcminutes.[29] This was an important characteristic to consider in the new study as it was initially assumed that a large deviation from north could indicate that the passages may not have been useful for observation of the NCP. The view area may not have encompassed the east and west elongations of Thuban, and this aspect was to be explored. In fact, although less accurate than the alignment of Khufu's pyramid, this alignment value for the main structure of the Trial Passages equates to less than ¼ of a degree of deviation from true north.

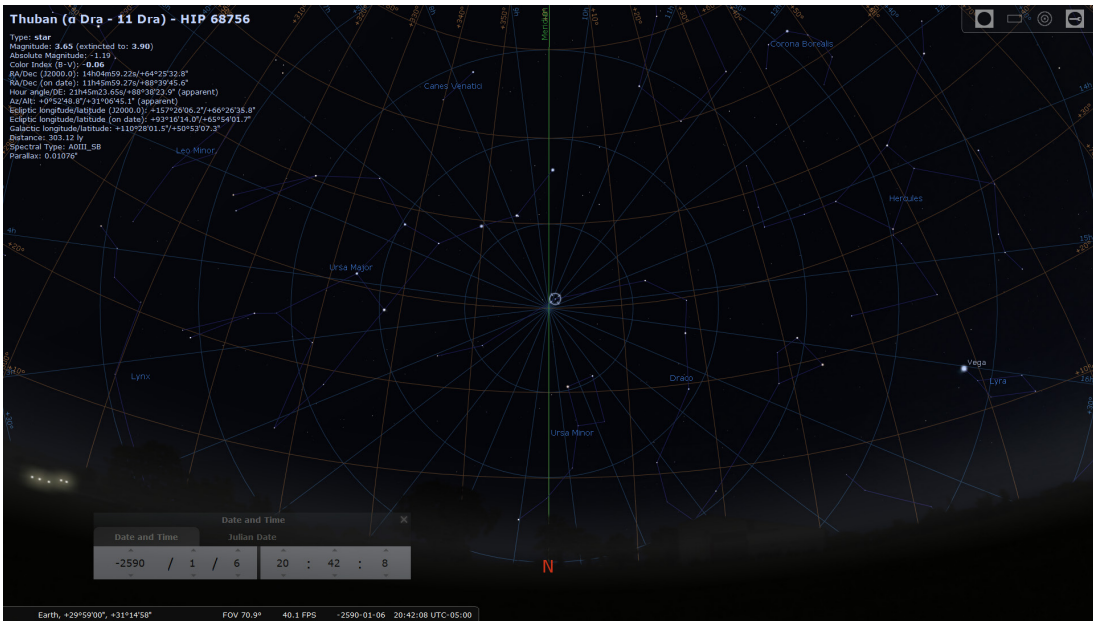

Fig. 3. Stellarium screen shot showing the software configured to represent the constellations visible from Giza in 2,590 B.C. Thuban is highlighted near the NCP in the center, and its astronomical data-set is shown top left. The green line represents the celestial meridian (David Lightbody).

Digital planetarium data

To determine which stars would have been visible from the passages when looking north at the time the Great Pyramid was built, the Stellarium 0.13.3 digital planetarium software was used.[30] The skyscape visible from Giza (Figure 3) was simulated by setting the location to that of Giza and by backtracking the system date to 2,590 B.C.

Once the ancient star positions at various times of the year in 2,590 B.C. were established and noted, the data was used to create a sub-section of the visible night sky incorporating a circle 8.5 degrees in radius around the NCP. This contained the whole area of sky visible from within the lower passages that was to be studied during the experiments. A representation of this area of

28 Petrie (1883), plate 3b.
29 Petrie (1883), p. 48.
30 https://stellarium.org/

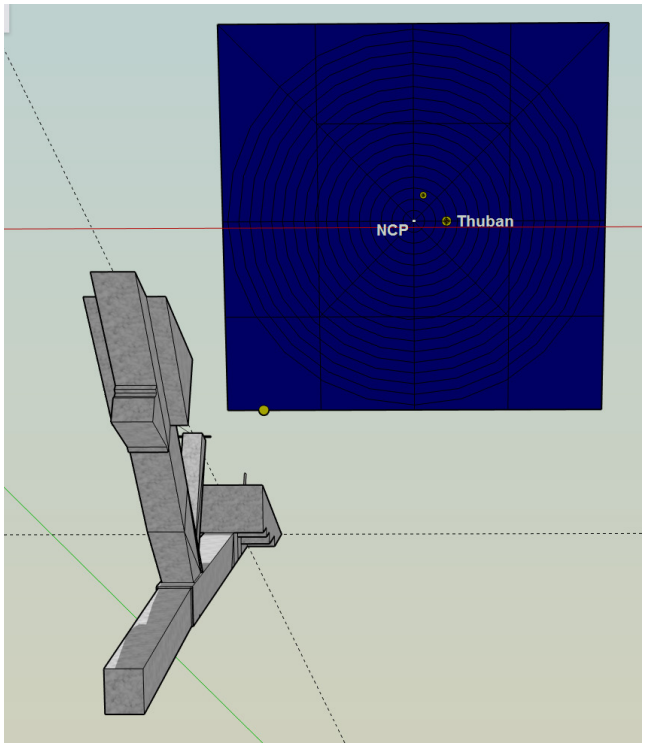

Fig. 4. View from the south east looking north of the Trial Passages looking up at the NCP and star square that is built into the model. This can be rotated to represent the correct time and date (model and image by David Lightbody).

sky was then built into the 3D CAD model environment in the form of a flat square of night sky visible to the north. The stars could not be represented or positioned effectively at infinity, as the model would have been far too large for the software to manage, so the square was positioned at 1,000 m distance from the shafts[31] on a direct line running north from the passages. A connecting line running from the passage entrance to the center of the square was inclined at 29.9792° N, which equates to the latitude of Giza, so that it was aimed directly at the NCP.[32] The star square was then inclined so that it was perpendicular to the line and so faced directly down at the shafts. Concentric circles were drawn around the NCP onto the star square at ½ degree intervals, which represented the visible angular distance of each circle from the NCP when observed from Giza.[33] The star Thuban, at a declination of 88°39', rotates just under 1 ½ degrees from the NCP. It therefore rotates very close to the third concentric circle on the star square and is shown there on

31 A slight error is introduced to the modelling due to the fact that 1000 m is not infinity (or at least a much larger distance to the real stars). Given that an observer within the passages could not move east or west of the center line by more than +/- 0.5 m, the parallax error across this distance compared to reality equates to only 1/35th of a degree at most. This is very small, but must be noted as significant when dealing with a procedure that achieved a real-world accuracy of 1/15th of a degree. Future models could simulate the star square at even greater distances, which could reduce these errors, but the current model allowed full exploration of the general method outlined below, aiming primarily to establish that the outer limits of the sky area visible from the passages contained the relevant stellar motions. The geometric calculations below were carried out with the stars essentially at infinity.

32 The NCP is the same angle above the northern horizon as the latitude of the location it is viewed from, and in fact this angle defines the latitude of the location.

33 The distance between each circle was set as 8.72 m. which equates to 0.5 degrees of a circle of radius 1000 m. This introduces a slight error that increases towards the outer edges of the circle, as the star section is represented as being a flat plane rather than a spherical surface concentric to the shafts. Again, this slight error is significant within the context of the experiment, but not significant to the specific method discussion and conclusions.

the diagram (Figure 4). The star Iota Draconis is also shown on the star square, however, in reality it was hardly visible to the naked eye, and while it was slightly closer to the NCP than Thuban there seems little reason to assume that it would have been used in preference to the brighter star Thuban.

Finally, the whole star square was offset to the west by just under a ¼ of a degree, as Petrie found that the main axis of the passages deviates to the east of north by this amount.[34] This means that the view line to the north looking out from the passages along the center line of the architecture actually passes half way between the NCP and the first concentric circle on the star square, to the right/east side of the NCP as seen from Giza.

Once the virtual architectural model and the stellar sky simulation were established, the view from within the passages to the north could be simulated and experienced (Figure 6).

The Trial Passages as an NCP observation location

In the new hypothesis the three openings onto the surface are interpreted as a southern access tunnel, a central vertical plumb bob shaft, and a star observation tunnel. After climbing down the southern access tunnel, the observer would position themselves down in the southern end of the observation tunnel, to the south of the plumb bob and the junction between the two inclined passages. With feet down to the south, they would then look north towards Thuban and the NCP.

The purpose of observing the stars in this way was to establish a long straight line on the levelled ground running due true north-south. Once defined, its orientation could be translated laterally across the ground using basic geometric surveying methods so that the sides of the monument could be set-out, aligned, and built according to this orientation. The land surveying methods used to translate the reference line orientation laterally are outside the scope of this present work.

In order to establish an accurate true north-south reference line, two points that are precisely due north-south of each other must first be accurately established on the levelled ground. If the NCP is to be used to establish the two initial points then the two points will initially be on a line sloping up towards the NCP. Two corresponding points must then be created on the horizontal ground by extrapolating the positions of the sloping points vertically down onto the horizontal plane. The further apart the pairs of points are in a north-south direction, the better accuracy can be achieved with the alignment, and so most hypotheses attempting to recreate the procedures have envisaged a short sighting device (merkhet) at the southern end accompanied by a very tall pole/obelisk/wall at the north end. The sight-line between the device and the tall structure will then be of significant length. The top of the envisaged northern structures would have been adorned with a pointer, a mark, or sight, or gnomon, and this would constitute the northern point of the sloped stellar sight-line pair. In order to accurately translate the point at top of the northern structure vertically down onto the horizontal ground plane, plumb lines must be used. In the case of measurements using a very tall northern structure that plumb line could be rather long. A long plumb line system will lose accuracy if the structure supporting it is not entirely stable over long durations or if there are any excessive air movements due to inclement weather, or due to solar heat induced thermals. People walking by or accidentally impacting the structure could cause further movement and loss of position. When operating at high levels of precision over prolonged periods the length of any such plumb line could have proved to be excessive.

34 Petrie (1883), p. 275.

One solution to this is to drop the southern end of the inclined north-south sight line down into the bedrock below the horizon (Figure 5), meaning that there is no plumb line required at all at the northern end. The plumb line will then be positioned at the southern end and can be hung down into the ground from a horizontal wooden support resting on the ground level bedrock. The bedrock containing the whole passage system will not move under most normal conditions. The plumb line will then be securely fixed to the bedrock and can be completely contained within a protective vertical shaft that is not susceptible to surface air movements or accidental displacement. It is suggested here that the vertical shaft in the Trial Passages was created and used for that very purpose.

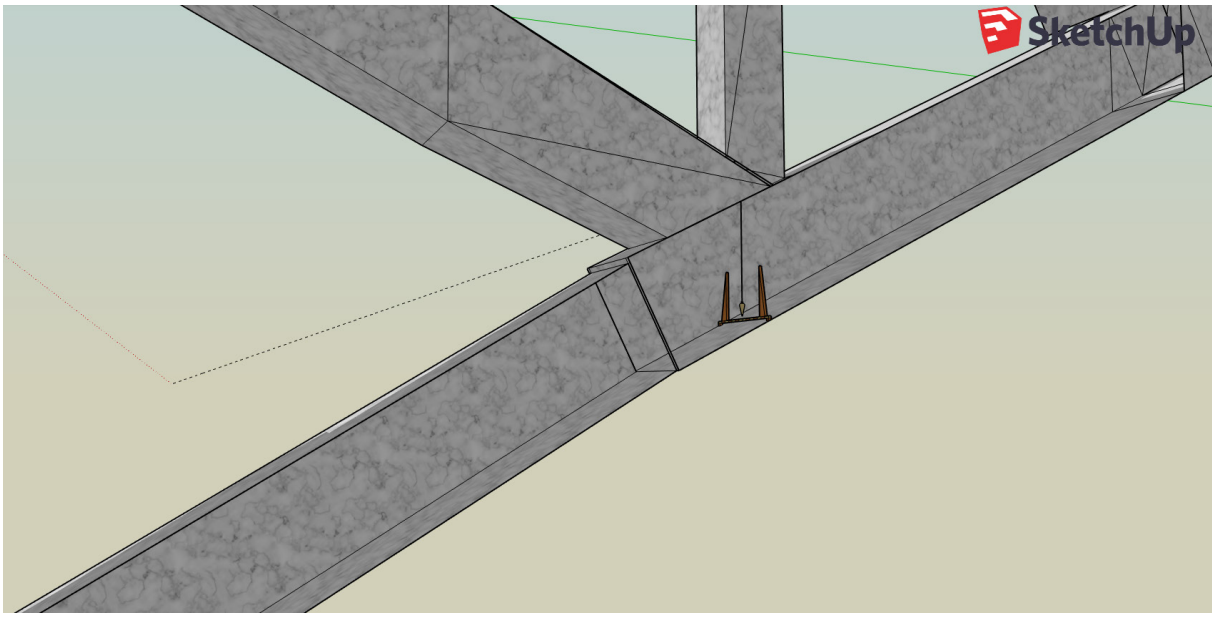

Fig. 5. Side view of the passages showing the observation location. An operator would enter by the southern shaft above left and climb down behind the alignment targets. A prostrate position would be assumed with legs down to the left, and head looking up to the right through the targets and past the plumb bob which hangs down the center shaft (model and image David Lightbody).

A calculation testing the initial hypothesis was carried out by the author in 2003. Based on the height, length, and average inclination of the Trial Passages, the initial calculations indicated that the vertical field of view to the north, from the bottom of the vertical shaft, would extend from around 26.5 to 33.5 degrees altitude (up-and-down) of the northern sky from Giza. The horizontal range of visible sky was of the same order (6 degrees, or 3 degrees to the east and west), and this would have allowed the motion of Thuban to be completely observed and described from the passages, given appropriate equipment.[35] The full motion of other circumpolar stars such as Kochab and Mizar were not visible. The exact form of the outer limits of the sky area visible from the shafts is complicated to define precisely due to the irregular form of the architecture at the northern end of the passages, and so in order to more accurately explore the details of the

35 According to Petrie (1883), pp. 211-12. "The setting out of the orientation of the sides… …would not be so difficult. If a pile of masonry some 50 feet high was built up with a vertical side from North to South, a plumb-line could be hung from its top, and observations could be made, to find the places on the ground from which the pole-star was seen to transit behind the line at the elongations, twelve hours apart. The mean of these positions would be due South of the plumb-line, and about 100 feet distant from it; on this scale 15" of angle would be about 1/10 inch, and therefore quite perceptible."

hypothetical setup, a 3-dimensional interactive model has now been built. The ancient viewing and measurement techniques used and the possible design of small hand tools and other equipment employed by an observer within the passages were also explored and tested (Figure 6).[36]

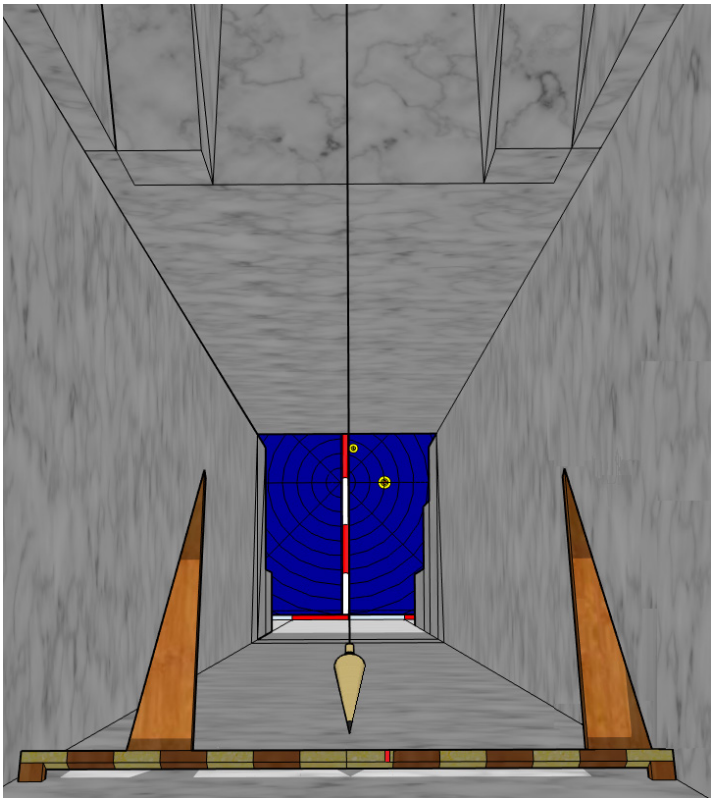

Fig. 6. General view from the lower southern shaft looking up at the NCP, which is the center of all the circles, through the targeting instrument, past the plumb line. The right side of the indicator pole on the surface is shown directly behind the plumb line. The NCP would be near the top of the third section of the pole from this position, The observer's eye would have to be slightly to the right of the plumb line to align accurately with the right side of the pole and the NCP, due to the architecture's ¼° deviation from true north. The position is marked with a short vertical red line in the diagram.. Each section of the pole is 1 cubit in height, so the pole would need to be only 3 cubits (approx. 1.5 m) in height to be used for this procedure. Each target is shown as 1 cubit tall and two horizontal cubits are used as a track (model and image by David Lightbody).

Observation method and equipment

To view a northern pole star in alignment with a plumb bob line suspended down the vertical shaft, the observer in the passages would have to be positioned to the south of the plumb bob's location, which is at the intersection of the three passages. In fact, there is adequate space at the junction of the two southern shafts so that an observer could climb down into the southern passages and enter the southern descending section without interfering with the plumb bob's location

36 While this paper focuses on a method for establishing an accurate sky location for the NCP, it might be worth taking into consideration what other stars and astronomical objects would have been observable from the bottom of the southern and vertical zenith shafts. This could open up the subject for further discussion and allow the circumpolar stars to be considered with respect to the asterisms and decans overhead and near or on the ecliptic.

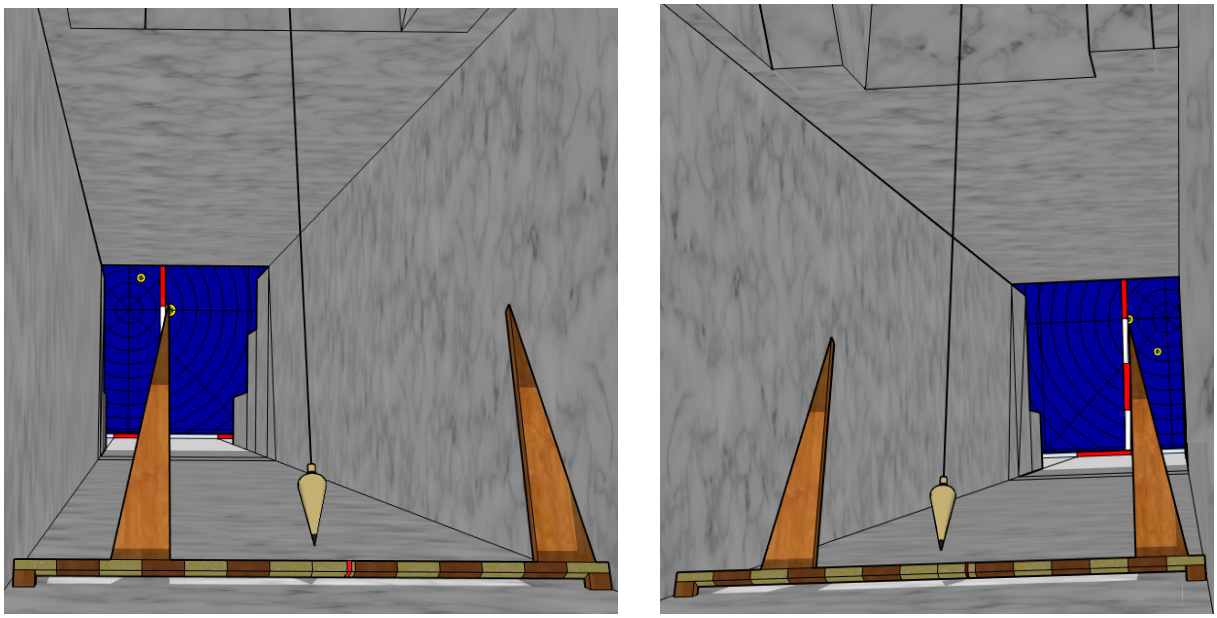

Fig. 7. View from the lower shaft observation position of the moveable targets set up to align with the east (left) and west (right) elongations of Thuban. The diagrams show each target aligned with the east/right side of the indicator pole, and then with the star Thuban. This eliminates errors due to the thickness of the pole. The plumb bob does not have to be positioned exactly half way between the two targets. A red mark can be put at the midpoint between the targets on the cubit. This is where the sight-line aligns with the NCP. The red mark is shown above and in figure 6. Once the offset (in this case to the east by almost 1 palm) from the plumb bob is is measured on the cubits and known, the plumb line can be used to translate the horizontal position of this offset point vertically, up to the surface ground level. A similar pair of cubits can be set up around the plumb line on the surface and the near 1 palm offset measured out east from the top of the line to define the position of point (P2) on the ground. Alternatively, the plumb line could actually be moved 1 palm east, until it was suspended directly over the red mark. (P2) would then be at the top of the plumb line at ground level (model and images David Lightbody).

or any targeting equipment that might have been set up close to it. The observer could then assume a prostrate body position, with legs stretched down to the south, lying on their front with head and eyes facing up to the north. The southern end of the shaft is slightly more inclined than the northern section, and this may have been designed to allow the observer to maintain body, head, and eyes below the level of the sighting equipment. The optimum observation position may not have been directly behind the plumb bob but further back down the shaft. A meter or more gap between eye and sighting targets would allow the observer to more easily focus near-simultaneously on three objects: a close target near the plumb bob's location, a mid-range vertical pole up on the surface at the north entrance, and the distant northern star. The three targets could then be precisely aligned. Once the eastern-most and western-most positions of Thuban through the year were established, the mid-point could be measured out. This point is marked in figure 6 as a thin red vertical line on the horizontal cubits. This point is of primary significance and its position must be translated up to the surface using the vertical plumb bob line to define the southern point of the main N-S alignment line (P2). The slight offset is discussed below. This procedure is broadly in accordance with the method that Petrie described, although the passages are sub-surface. It does not rely on any simultaneous transits of stars or more complex astronomical methods that are subject to the effects of precession.[37]

37 Several such hypotheses have been proposed over the years that outline such methods, but this paper is limited to proposing

The design of the small adjustable equipment used to carry out these measurements is based on elements described by Petrie and Dash and others. The system consists of two moveable targets below ground that are aligned with a vertical object at ground level near the northern entrance. The vertical indicator on the surface there could be a short suspended plumb line, or more realistically, a short solid pole that had been set up vertically using a plumb line. A thin plumb line would be difficult to see from the lower shafts in darkness, and so a white painted straight pole or similar is envisaged in the current simulation. In the model it is shown as a red and white pole with separations at 1-cubit vertical intervals. It is hereafter referred to as the vertical indicator pole. The point at the base of the pole would define the northern end of the main N-S alignment line (P1).

Each moveable target (the vertical triangles) down below is then moved laterally to align its vertical inside edge with the side of the vertical indicator pole at the surface and with the eastern or western- most 'elongation' of Thuban respectively (on its circuit around the NCP) through the year or night (Figure 7). The midpoint between the targets then defines the precise horizontal position that looks directly up past the side of the indicator pole at the NCP. The choice of side used is arbitrary, but in the current simulation the right, east side of the pole is used.

Geometric analysis

The first calculation to perform was to evaluate if the width of the tunnel was adequate to contain the full east-west travel of the two targets used for observing Thuban. Using data derived from the model, it was seen that the distance from either sight's inside edge up to the indicator pole at the north entrance (towards the point where the star appears to the observer) is approximately 13.54 m. At this distance from the indicator pole, the full 162 arcminutes[38] horizontal sweep between the two elongations of Thuban as it circles around the NCP would translate down to a 64 cm gap between the two moveable targets when they were both set up in alignment with the elongations. This equals 32 cm on each side of a central plum bob and main axis line, if the passages themselves were perfectly aligned to true north.

Working backwards from the measured survey data, however, a more precise position can be calculated for where the observer would have placed the midpoint marker between the two sights (Figure 8). To obtain the position, an offset to the east must be factored in due to the 14.72 arcminutes (0.245°) misalignment of the architecture to the east of true north, as measured by Petrie (A in Figure 8). Finally, a small offset should be factored in stemming from the small error of the Great Pyramid's final orientation, assuming that this error was derived from small instrument observation errors made in the Trial Passages (B in Figure 8). The passage misalignment value is, therefore, added to the pyramid's average misalignment error of $1/15^{th}$ of a degree (0.067°) to find the position that the operator would originally have assumed was aligned with the NCP and true north. The two misalignment values are azimuth angles expressed on the horizontal plane, and not on a plane inclined up to the NCP so the linear offsets produced by these angles must, therefore, first be calculated for position P1 on the horizontal plane at the top of the plumb line, at the horizontal distance from the sighting pole to P1 of 11.72 m (again derived from the model).[39] This offset error value can then be translated vertically back down to the cubits at a ratio of 1:1.

a Thuban-based method rather than comparing and evaluating all of the different methods proposed by Spence (2000) and others. See also Dash (2013), p. 9.

38 81 arcminutes x 2 = 2 degrees 42 arcminutes.

39 The respective angles of 0.245° and 0.067° give a total of 0.312°. At a distance of 11.72 m, this gives a total offset of 6.38 cm (5.01 cm + 1.37 cm).

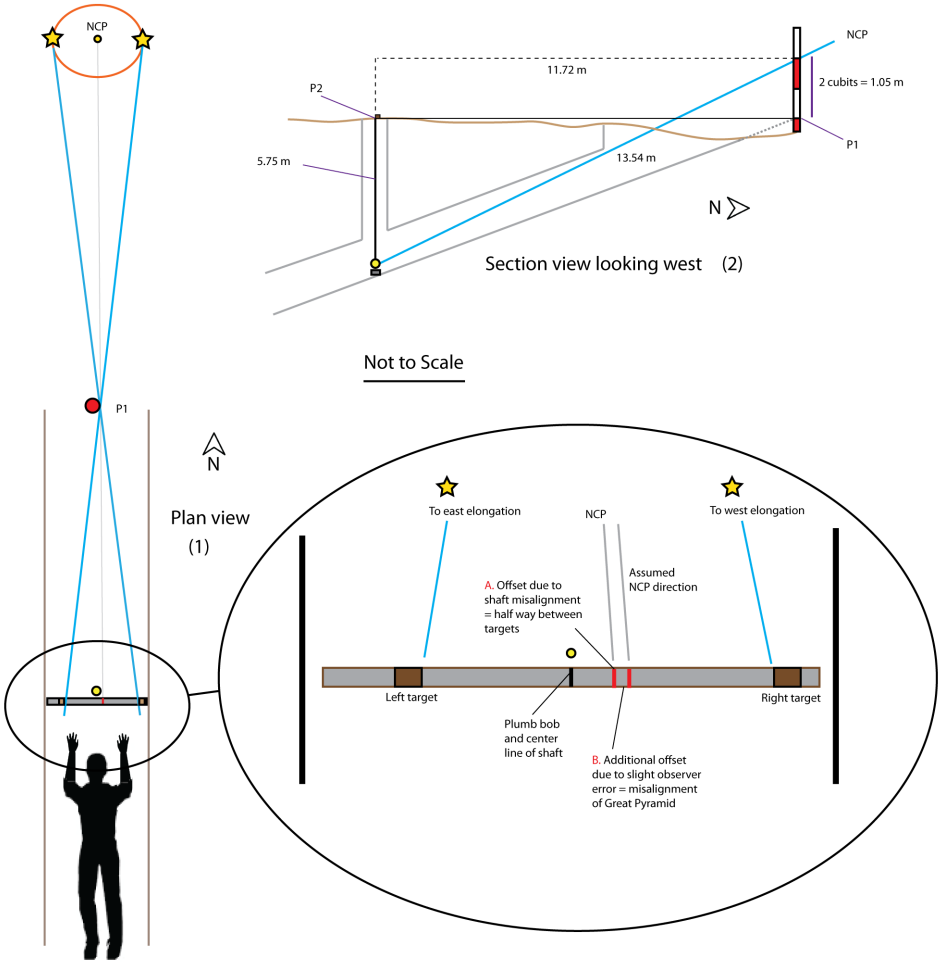

Fig. 8. Plan view (1) of observer in position looking north at the NCP through the targeting instrument and past the plumb bob. Enlarged view of target track shows positions of sight lines to NCP, and to elongations of Thuban, including more precise offsets (A and B) due to architectural and other/operator errors. Section view (2) shows the vertical geometry of the system and how the indicator pole would correspond to irregular surface topography, which deviates from the model (image David Lightbody).

The resulting offset of 6.38 cm to the east would mean that there was a distance of 38.38 cm between the plumb line/center of the passage to the target on the east side, and a distance of only 25.62 cm between the plumb line/center of the passage and the target on the west side. The assumed center point between the two targets, which is marked on the cubit in red, is 6.38 cm or almost 1 palm to the east of the plumb bob and the center line of the passages, and it is shown in the diagrams (Figures 6 and 7).

The standard-sized Old Kingdom rock-cut passage is typically 2 cubits wide, equating to 1.05 m or 52.35 cm on each side of the center line. This corresponds accurately with Petrie's measured value of 41.35 inches total width = 1.05 m, leaving 14 cm free at the east side of the passage. The thickness of the vertical target on that side would then have to fit within this free space, and some clearance would also be required between the wall and the operator's head to ensure a clear sight past the target's edge to the north. In conclusion, the full east-west range of shaft movements required to observe the full east-west range of Thuban's movements is just within the scope of the passages,

when using the proposed arrangement and the associated survey data. Two cubit-rods are used in the model to track the east-west axis of the targeting devices and to measure the observed offsets.

The construction sequence envisaged here is that a fairly rapid alignment to north was carried out before the passages were cut into the bedrock. According to Petrie, the resulting misalignment of the Trial Passages was approximately ¼ of a degree east of true north. The Trial Passages were then used to establish a more accurate orientation line for the Great Pyramid itself. The final N-S line would have been extrapolated and translated laterally to set out the east edge of Khufu's monument. The Great Pyramid's resulting misalignment was between 1/15th and 1/16th of a single degree, so that the level of accuracy achieved by using this two-step method was increased by a factor of 4.

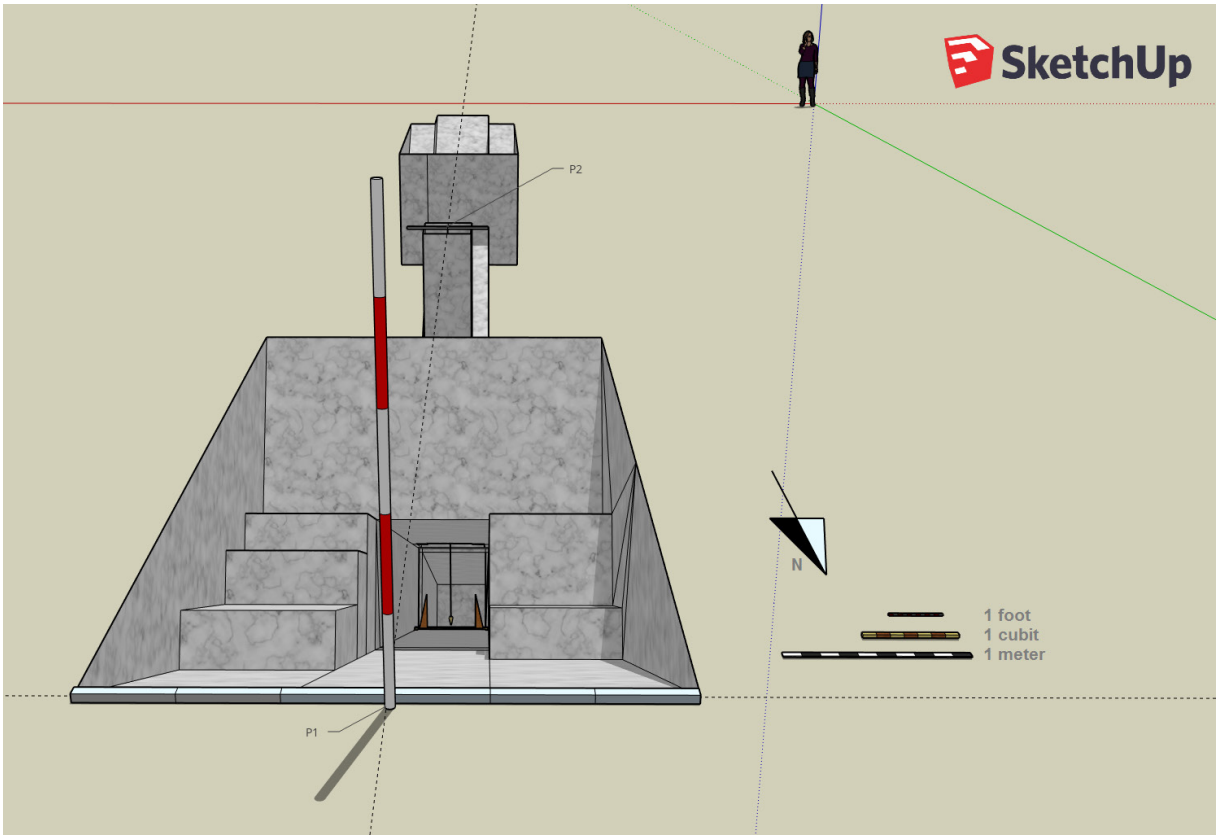

Fig. 9. View looking south down the north shaft of the Trial Passages. The two moveable targets and the bottom of the plumb line are visible within the shafts. The vertical indicator pole is shown at the end of the north entrance. It is displaced slightly to the west so that its east side is in line with the central axis of the passages. Points P1 and P2 determine the desired north-south alignment line (model and image David Lightbody).

Occulting the star

One important procedure that would have ensured the real-life high precision of the method would have been to use only one side of the vertical indicator pole erected on the surface to align with the star (Figure 9). The observer in the passages down below could judge the position of the star by moving their head left and right and by observing through only one eye the point at which the star occulted behind the pole. The star would disappear from view at the exact moment the pole's edge and star were aligned with the observer's eye. The inside edge of the adjustable target-

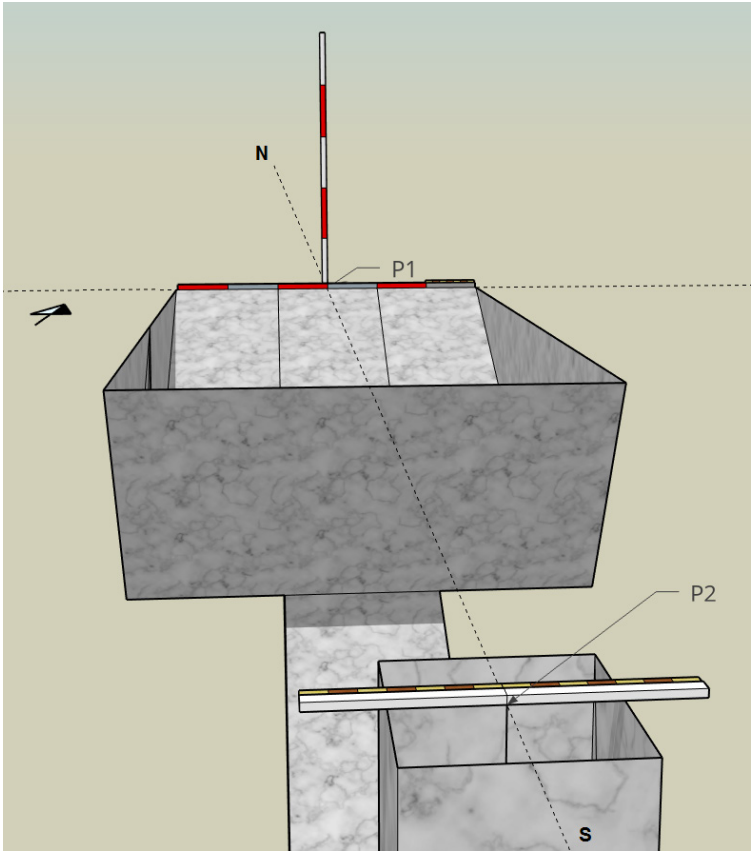

Fig. 10. The final alignment line. Once the observations were completed and the plumb bob was positioned over the central point between the targets, points P1 and P2 would accurately define the horizontal line aimed at true north. Alternatively, if the plumb bob was slightly off center down below, the differential could be accurately noted and then marked out on the surface using the cubit scales depicted. In this case, point P2 would then be almost 1 palm to the east side of the top of the plumb line (model and image David Lightbody).

sight down below could then be positioned carefully in between the observer's eye and the pole, to align all three with the distant star. The moveable sights were close to the observer's view point, thus facilitating fine adjustments and producing an accurate alignment. On the other hand, an alternative setup with a single static indicator below and two moving targets on the surface would have required an additional operator up above and would have complicated the system, so it is likely that the surface level pole was static once embedded in place. In the virtual model, the pole was set so that its east edge is aligned with the north-south axis or center line of the architectural model. This would have been unnecessary in reality as the resultant north south line would in fact have been defined by the exact position of the eastern side of the pole, and so it was not necessary to very precisely position the pole initially. On the other hand, the pole had to remain very precisely vertical and stay firmly set in place once positioned there. Observations may have taken several months so that the full motion of Thuban could be observed and measured and so the pole would have required some degree of physical protection from accidental displacement. In the model, it is assumed that the eastern edge of the pole where it entered the ground surface defined the point (P1) that was the north end of the main and final north-south alignment.[40]

40 One final point of note regarding the precision of the method is that, as the pole and the sights in the model were both erected vertically, it was not necessary for the observer to maintain or mark a constant head and eye observation height. The distance

During the virtual experiments, it was noted that the surface pole could theoretically be moved east or west up by to half a meter, and yet still be visible from the entire lower shaft observation position. This means that the horizontal view of the almost 3-degree horizontal range of Thuban to be measured by the instrument could be adjusted by up to +/- 2 degrees if necessary, by adjusting the pole's location,[41] for example in the event of a significant misalignment of the shafts during construction. The offset pole could still be used to observe and align with both elongations using the targets on the instrument below. This strengthens the case indicating that the initial orientation of the Trial Passages did not have to be very precise in order for them to be used to carry out very precise measurements. That was an unexpected result but it shows the strength of carrying out experimental archaeology. The approach has consistently proved to be effective and informative and tools and models can now be made in physical reality and/or in a more sophisticated virtual environment to further explore the set up.[42]

The final task to be accomplished once the pole and targets were aligned would be to transfer the vertical location of the center point between the two targets vertically up to the surface level (Figure 10). The plumb line was used for this purpose and it would have to be completely still during this procedure. This would establish point (P2), being the southern end of the main alignment at ground level. Both points, (P1) (N) and (P2) (S), that defined the final alignment would then have been accurately marked on the horizontal surface plane (Figure 10).

A note must be included here regarding the ground level around the passages. Rather than being carefully levelled like the pavement area around the Great Pyramid was, Petrie showed on his section drawing that the exposed bedrock surface around the passages is irregular and falls away to the north end. The ground there is clearly lower and is broken up, and so the reality of the structure deviates significantly from the ideal model tested above. Figure 8, however, shows how the alignment process could work even if the indicator pole were embedded below the ideal horizontal ground level. In essence, the geometric system would function just as it does in the ideal model, although the horizontal final alignment line would be elevated above the bedrock in places. A new topographical survey of the area could provide more data allowing more in-depth analysis, but as Petrie mentions there was already structure removed from the area around the northern passage entrance by the time he surveyed it in 1882/3, it could be difficult to reconstruct the structure and surface in its original form for this location.

Observations referencing the wider dataset and historical context

It is informative to place the cardinal alignment data for the Great Pyramid within the wider dataset derived from pyramids built during the third through sixth dynasties.[43] With the Thuban-based alignment procedure described above, precession is not a factor, so the various values of casing alignment errors should be compared in order to identify other possible causal factors.

between the inside edge of the sight and the east-side edge of the pole remained constant for any eye height, as they are parallel and the sight line connecting them was at a constant angle for any observer eye height.

41 At 13.54 m distance, 2 degrees equates to 47 cm.

42 It should be noted, however, that the closer the main axis of the shafts was to True north in the first place, the more accurate the final results would be, as the horizontal E-W axis of the targeting instrument track down below would be more symmetrically aligned with the surface pole and the NCP.

43 Other Egyptian pyramids do not have similar "mini-observatories" nearby. It may be proposed that they used above-ground measurement techniques, which may go some way towards explaining their lower levels of accuracy and precision. Additionally, the second and third great pyramids at Giza may have used the same line as a reference, or the west side of Khufu's monument.

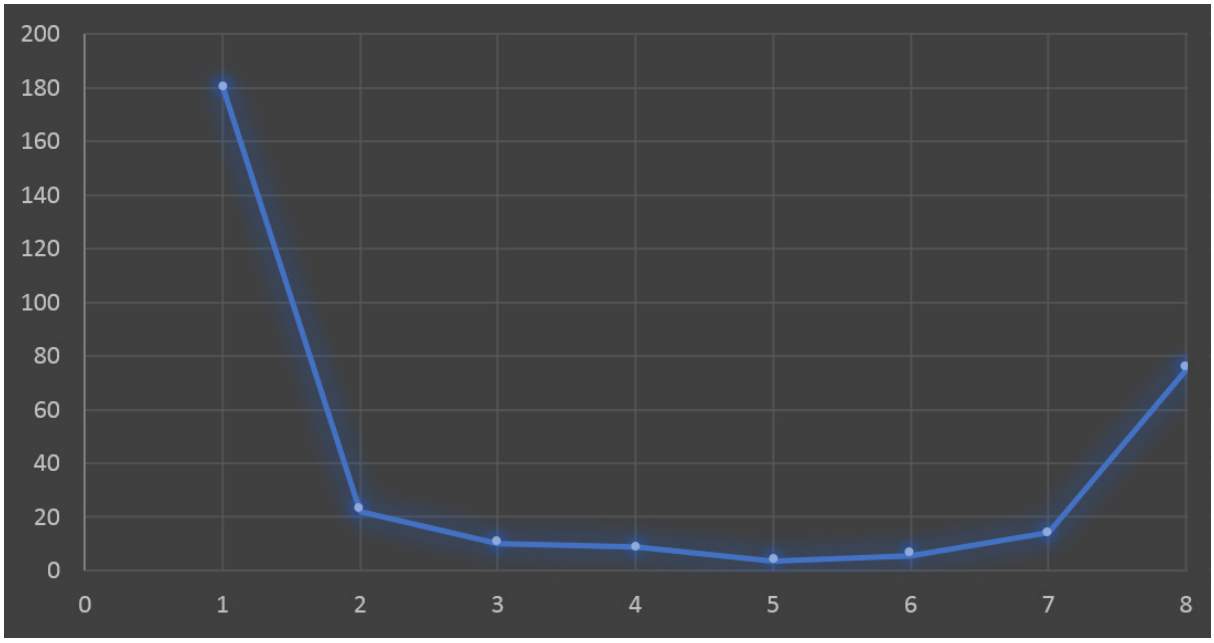

Fig. 11. Errors in orientation to true north and variation through time (absolute values in arcminutes). 1. Djoser, 2. Meidum (passage), 3. Bent, 4. Red, 5. Khufu, 6. Khafre, 7. Menkaure, 8. Average of Sahure and Neferirkare. Data derived from Haack (1984) and Dash's working paper on the Simultaneous Transit method (2015). For Sahure (Spence 2000) gives 23' west of north and Jaromir Krejci (unpublished) approximately 20' west of north.

Figure 11 shows a plot of absolute values of pyramid alignment errors through time.[44] The pattern of change corresponds well with conclusions drawn from other aspects of the monumental architecture of the period, and wider historical information about the Old Kingdom.[45] The trends and errors in the dataset can be explained by an increasing level of construction quality and accuracy leading up to Khufu's reign, followed by a decreasing level of quality and accuracy, as the Old Kingdom began to decentralize, and slowly headed toward eventual disintegration. The pattern also corresponds inversely with the magnitude of the construction projects. As the pyramids got larger, their alignments became more precise.

Another significant observation is that the descending passages in pyramids were apparently even more accurately aligned to north than their outer casings. Dash noted that it would be easier to align the sloping descending passages directly to the northern stars than it would be to set out a horizontal line using a system with tall plumb lines, such as is proposed here. The latter method would then have been used to define the alignments of the horizontal sides of the monuments only. In Khufu's case the east side would have been defined first, and it is the most accurately oriented side. This methodological difference can explain the qualitative difference in accuracy levels between descending passages and outer casing alignments.

44 Without regards to the sign of the rotational values; whether negative or positive.
45 Dash (2015c), Figure 5.

Iconographic sources

From the end of the First Intermediate Period onwards, an artistic convention developed that incorporated representations of the northern stars as well as important decanal stars and those near the ecliptic (most notably Orion and Sirius) on coffin lids. This was first included as an artistic theme on 11th dynasty coffins from Asyut.[46] During the New Kingdom, more elaborate versions of the scene were included in elite tomb artwork, most often on the vaulted ceilings of the burial chambers. These are referred to as astronomical ceilings, the most famous of which is that found on the ceiling of Senenmut's early 18th dynasty tomb at Deir-el Bahri. It is not the intention of this article to address those diagrams in detail, but it is worth noting that the scenes seem to represent a procedure through which the deceased would be able to orient to north, and perhaps the dates when this procedure should be carried out. This would allow the deceased to find the imperishable stars, despite the fact that their tomb was not oriented according the cardinal directions like the pyramids had been.

The scenes remain enigmatic, but some scholars have also suggested that the tall element at the center of the scene should be interpreted as a gnomon or sighting instrument.[47] A 19th dynasty scene from the Ramesseum is particularly interesting in this respect (Figure 12), as it seems to show deities holding marker posts and stretching cords up to the polar constellations. The part of the relief showing a motif named *Meskhetiu* is thought to refer to today's Ursa Major (Big Dipper, Plough, Great Bear) asterism,  . This element is often shown in the form of a bull, a bull's foreleg, or a bull's hide and head.

As well as having the form of bull's foreleg it is believed that the constellation was perceived as being shaped like an adze (a woodworking tool), and that it may have been symbolically related to the adzes used in the funerary ritual known as the opening of the mouth ceremony. All of these ideas are associated with rebirth into the afterlife.

Thuban lies between the two Ursa asterisms in the sky and they may have been used as indicators to help identify which star in the sky was Thuban. An alignment of the two stars near the handle of the Big Dipper, pointing towards Ursa Minor, indeed runs past Thuban. When the Big Dipper was to the west of Thuban in the night sky then Thuban would have been very close to transiting the meridian and therefore close to true north. This could have provided a rudimentary method of accurately finding true north that may have been developed once the movements of the circumpolar stars had been studied, measured, and understood during the Old Kingdom. It is not the intention of this article, however, to study or analyze these diagrams in any more detail here, but it is worth being aware of them when considering the practical methods that might have been developed to find true north in the Memphite Necropolis during the Old Kingdom.

Conclusions

The monumental Old Kingdom architecture of Giza continues to fascinate the global audience as well as archaeological experts. The precise cardinal alignment of Khufu's Great Pyramid is one of the most impressive aspects of its design and construction and it has remained challenging to explain how it was achieved. This study puts forwards a new hypothesis that the so-called Trial Passages east of the Great Pyramid were used in the alignment process.

---

46 Coffin lids from Assiut, 11th Dynasty, Neugebauer and Parker (1960), Vol. I, plates 4-21.
47 Lull (2009).

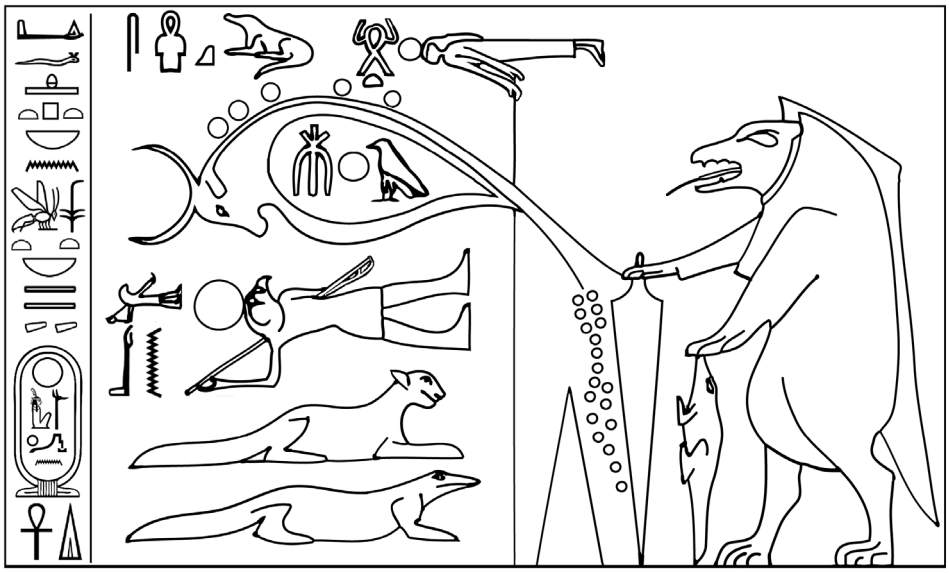

Fig. 11. Representations of the stars of the northern circumpolar region, as well as elements indicating an alignment procedure and associated equipment. From the Ramesseum (New Kingdom). The bull represents Meskhetiu, part of Ursa Major.

To test this hypothesis, experiments and calculations were carried out in conjunction with a virtual 3D model and planetarium software. These demonstrated that it is conceivable that a horizontal line on the surface could have been established that deviated by less than 1/15th of a single degree from true north, using the rudimentary method described and the rock-cut structure. It must be stressed, however, that it would have required an observer with excellent eyesight, a prolonged observation period perhaps stretching into several years, and very carefully handling of the different small components of the instrument to achieve this high level of precision.

The observations would have culminated with the positioning of two moveable targets, between which a mark would have been created that defined the east-west position of the point P2 on the surface. Any positional offset measured would have been translated to the surface using cubits and a long plumb line hanging down the central vertical shaft. The model showed that an offset of nearly 1 palm east from the centerline of the Trial Passage's architecture would have produced a final alignment equal to that observed in the survey of the Great Pyramid's base perimeter, once points (P1) and (P2) were connected.

Once the main alignment line was established, it would have been possible to accurately extend the line to the north and south with simple surveying techniques, but it would have been more complex to accurately displace the alignment east and west, for example to define the pyramid's east side which lay 87.5 m to the west. That task lies outside the scope of the current study, but it is worth noting that once the orientation of the NCP was established, it would also have been possible to note when Thuban crossed the meridian, directly above or below the NCP. If this information was quickly communicated across the work site, then any worker with a portable *merkhet* (a hand-held plumb bob and sight) would have been able to set up a local alignment to Thuban and the NCP that was extremely accurate. More elaborate devices might have allowed highly precise local alignments to be set up anywhere across the site at the given time. In that case, the local alignments were derived from the long duration measurements taken in the Trial Passages, but were not directly linked to them by physical terrestrial surveying measures.

There is almost no written or physical evidence of the methods used to achieve the alignment, and so the proposed arrangement described here in this article remains hypothetical. There is no suggesting that this interpretation is definitive in any way, but it should prove interesting food for thought for the many scholars who remain intrigued by the early developments in the exact sciences made at Giza. Future field work to study the architectural remains of the Trial Passages seems an unlikely scenario at present, but renewed interest in them may help initiate improved measures to preserve them for future generations, and a new topographical surface survey would be informative.

The results of this research project demonstrate that experimental archaeology has strengths as a research strategy. This research showed that archaeological experiments can be carried out in the virtual world just as they can be carried out in the real world. Increasingly sophisticated computers and virtual or enhanced reality environments will undoubtedly become more prominent research tools in the future. Just as non-destructive testing methods have certain advantages over more traditional and destructive archaeological methods, virtual archaeological research environments allow researchers to carry out work while avoiding many of the problems inherent with site-based archaeology. Travel costs, environmental damage, permit delays, and safety issues can all be avoided in the virtual world.

Bibliography

Arnold, D. (1991), *Building in Egypt: Pharaonic Stone Masonry,* Oxford: Oxford University Press.

Arnold, D. (2003), *The Encyclopaedia of Ancient Egyptian Architecture,* New York: I.B. Taurus.

Baines, J. and Yoffee, N. (1998), 'Order, Legitimacy, and Wealth in Ancient Egypt and Mesopotamia', in *Archaic States*, edited by G.M. Feinman and J. Marcus, Santa Fe: School of American Research Press.

Belmonte, J.A. (2001), 'On the Orientation of Old Kingdom Egyptian Pyramids', *Journal for the History of Astronomy, Archaeoastronomy Supplement* 32, pp. S1-S20.

Belmonte, J.A., Polo, M.A.M. and Miranda, N. (2009), 'Unveiling Seshat: New Insights into the Stretching of the Cord Ceremony', in J.A. Belmonte and M. Shaltout(eds.), *In Search of Cosmic Order: Selected Essays on Egyptian Archaeoastronomy*, Cairo: SCA Press.

Bronk Ramsey, C., Dee, M.W. Rowland, J.M., Higham, T.F.G., Harris, S.A., Brock F. and Quiles, A. (2010), 'Radiocarbon-Based Chronology for Dynastic Egypt', *Science* 328, pp. 1554-1557.

Chatley, H. (1940), 'Egyptian Astronomy', *The Journal of Egyptian Archaeology* 26, pp. 120-126.

Cole, J.H. (1925), *The Determination of the Exact Size and Orientation of the Great Pyramid of Giza,* Paper no. 39, Cairo: Survey of Egypt.

Dash, G. (2013), 'How the Pyramid Builders May Have Found Their True North', *AERAGRAM* 14, pp. 8-14.

Dash, G. (2015a), 'Did the Egyptians Use the Sun to Align the Pyramids?', *AERAGRAM* 15-1 & 2, pp. 4-28.

Dash, G. (2015b), 'The Great Pyramid's Footprint: Results from Our 2015 Survey', *AERAGRAM* 16-2, pp. 8-14.

Dash, G. (2015c), 'Simultaneous Transit and Pyramid Alignments: Were the Egyptians' Errors in Their Stars or in Themselves?', *Glen Dash Foundation for Archaeological Research,* Vol. Revision of January 27.

Dash, G. (2017), 'Occam's Egyptian Razor: The Equinox and the Alignment of the Pyramids', *The Journal of Ancient Egyptian Architecture* 2, pp. 1-8.

Dorner, J. (1981), *Die Absteckung Und Astronomische Orientierung Aegyptischer Pyramiden,* Innsbruck: Universitaet Innsbruck.

Edwards, I.E.S. (1979), *The Pyramids of Egypt,* Middlesex: Penguin.

Greenlees, D. (1925), 'The So-Called "Trial Passages" of Petrie East of the Great Pyramid', *Museum of Fine Arts, Boston, Giza Excavation Diary,* Vol. 4, p. 308.

Greenwell, D. (2005), 'Ancient Egyptian Temples: The Foundation Ceremony and Foundation Deposits', *The Ostracon. The Journal of the Egyptian Study Society* 16-2, pp. 3-6.

Haack, S.C. (1984), 'The Astronomical Orientation of the Egyptian Pyramids', *Journal for the History of Astronomy* 15, no. Archaeoastronomy Supplement, p. 119.

Khurana, H. and Symons, S. (2016), 'A Catalogue of Ancient Egyptian Sundials', *Journal for the History of Astronomy* 47-4, pp. 375-85.

Lehner, M. (1985), *The Pyramid Tomb of Hetep-Heres and the Satellite Pyramid of Khufu,* Mainz Am Rhein: DAIK and Verlag Phillip von Zabern.

Lightbody, D. and Monnier, F. (2019), *The Great Pyramid: Haynes Operations Manual.,* Sparkford: Haynes.

Lull, J. (2009), 'A Possible Ancient Egyptian Astronomical Instrument for Positioning the Central Meridian', *Discussions in Egyptology* 46, pp. 47-56.

Lull, J., and J.A. Belmonte (2009), 'The Constellations of Ancient Egypt' in *In Search of Cosmic Order, Selected Essays on Egyptian Archaeoastronomy*, edited by J.A. Belmonte and M. Shaltout, Cairo: SCA Press.

Maragioglio, V. and Rinaldi, C.A. (1965), *L'architettura Delle Piramidi Menfite 4. La Grande Piramide Di Cheope Plates,* Vol. IV: Rapallo.

Maragioglio, V. and Rinaldi, C.A. (1965), *L'architettura Delle Piramidi Menfite 4. La Grande Piramide Di Cheope Text,* Vol. IV: Rapallo.

Monnier, F. (2017), *L'ère des géants,* Paris: Éditions de Boccard.

Neugebauer, O. and Parker, R.A. (1960), *Egyptian Astronomical Texts. Four Volumes: I. The Early Decans; II. The Ramesside Star Clocks; III. Decans, Planets, Constellations and Zodiacs (Text); III. Decans Planets, Constellations and Zodiacs (Plates), Providence*: Brown University Press.

Parker, R.A. (1950), *The Calendars of Ancient Egypt,* SAOC 26, Chicago: University of Chicago Press.

Petrie, W.M.F. (1883), *The Pyramids and Temples of Gizeh - 1st Edition,* London: Field & Tuer.

Petrie, W.M.F. (1990), *The Pyramids and Temples of Gizeh - 2nd Edition from 1885 Republished in a New and Revised Edition with an Update by Zahi Hawass,* London: Histories and Mysteries of Man Ltd.

Robins, G (1995), 'Mathematics, Astronomy, and Calendars in Pharaonic Egypt', in J.M. Sasson, J.M. Baines, G. Beckman and K.S. Rubinson (eds.), *Civilizations of the Ancient near East*, Vol. 3, London: Charles Schribner's Sons.

Salmas, A.C. (2013), 'La Mesure du demps de la journée (I). Modules et fonctionnement des premières horloges à ombre', *BIFAO* 113, pp. 353-380.

Salmas, A.C. (2014), 'La mesure du temps de la journée (II). Modules et fonctionnement des horloges à ombre tardives et des cadrans solaires', *BIFAO* 114, pp. 419-46.

Spence, K. (2000), 'Ancient Egyptian Chronology and the Astronomical Orientation of the Pyramids', *Nature* 408, pp. 320-324.

Vyse, H. (1840), *Operations Carried on at the Pyramids of Gizeh in 1837: With an Account of a Voyage into Upper Egypt, and an Appendix,* London: J. Fraser.

Wilkinson, T.A.H. (2001), *Early Dynastic Egypt,* London: Routledge.

The 3D model of the Trial Passages developed for this research project has been shared with colleagues on Sketchup 3D Warehouse (go to https://3dwarehouse.sketchup.com/ and search for "Trial Passages by David Lightbody") so that other researchers can test, adapt, and use it as they see fit within their own virtual research environments. The author can be contacted at davelightbody@hotmail.com

Appendix

Photos I-VII

Photographs of the Trial Passages site from 2003:

I - General view to SW, II - S entrance, III - central shaft, IV - descending passage from N entrance, V, VI - N entrance, VII - General view from N (courtesy of Jon Bodsworth with permission).

I

II

III

IV

V

VI

VII